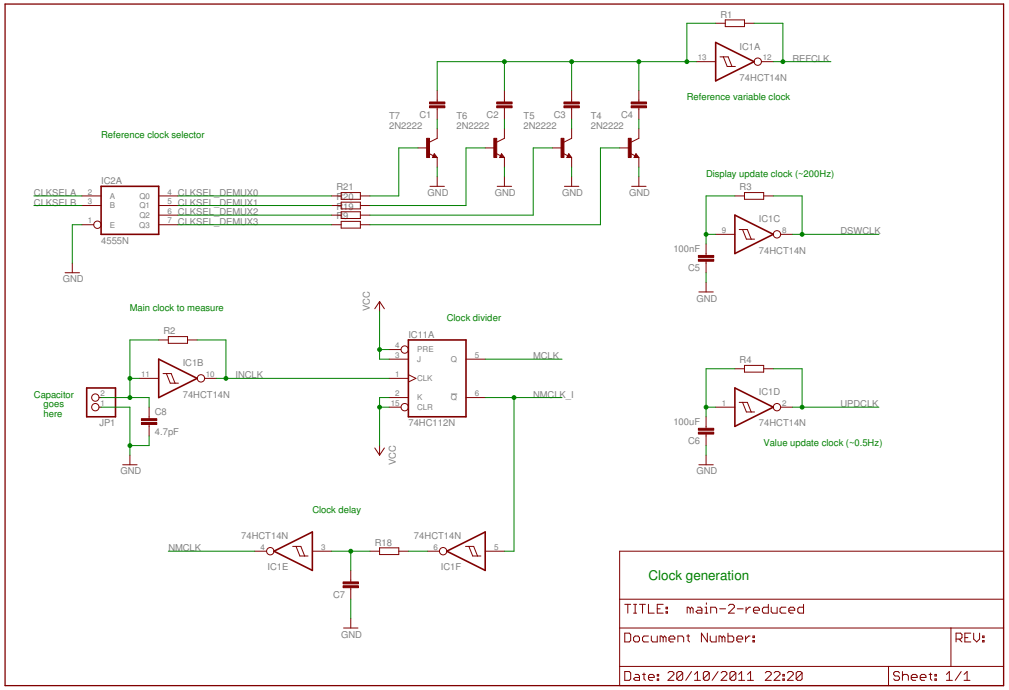

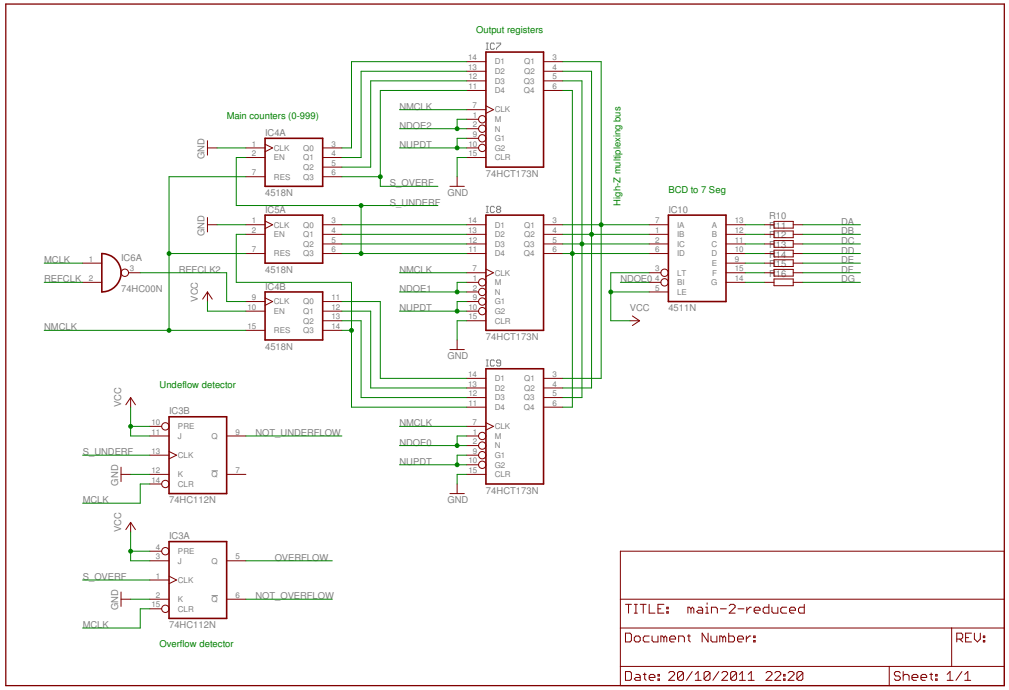

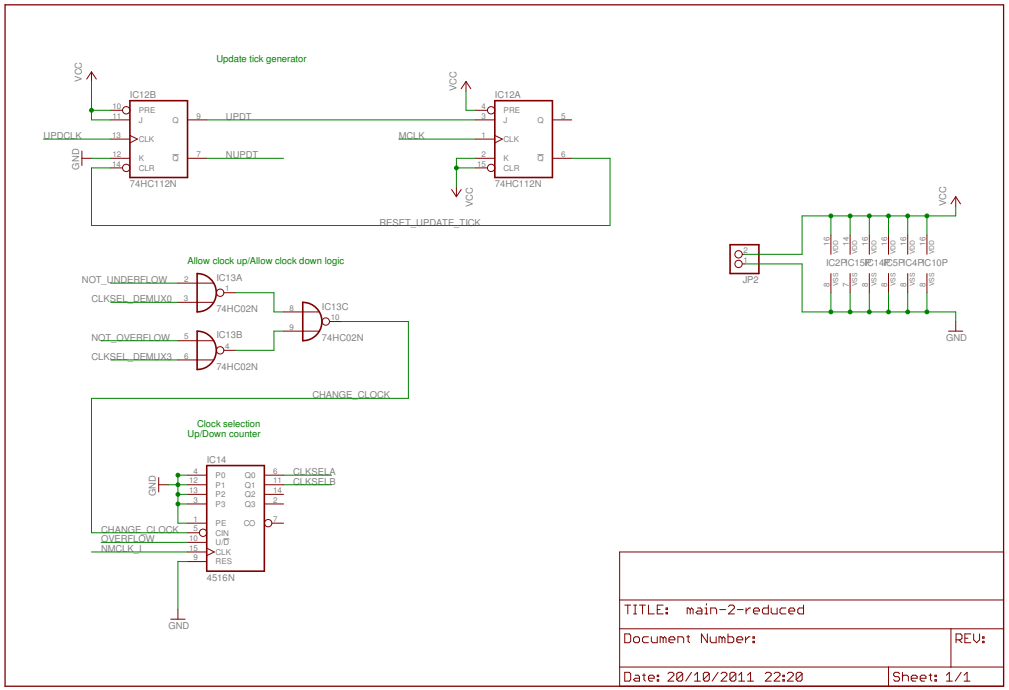

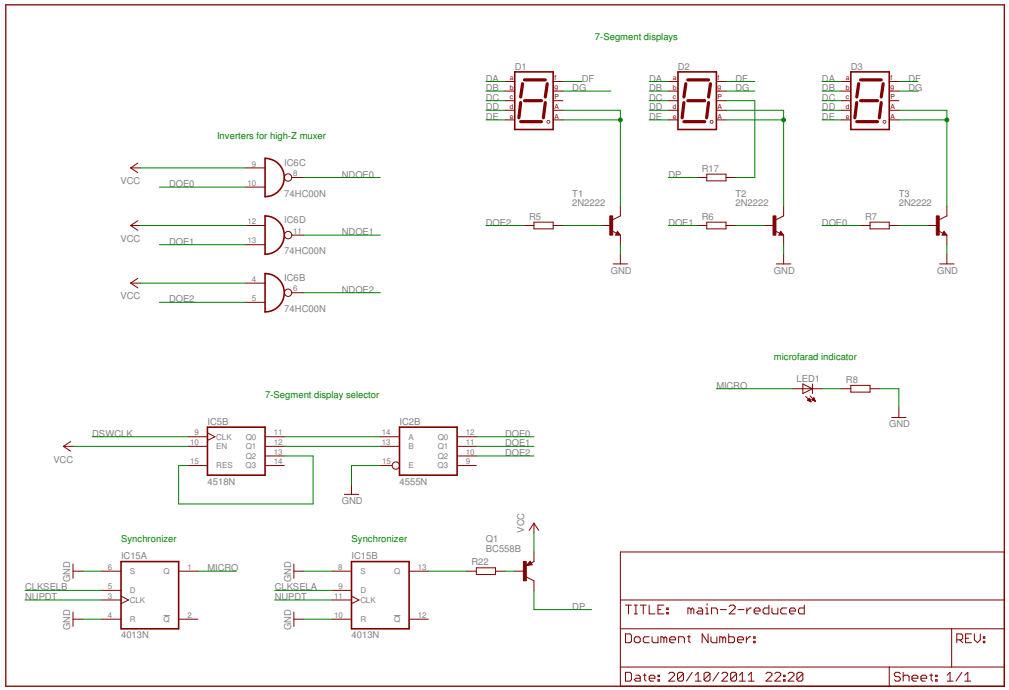

20/10/2011 23:39 f=0.50 /home/alvieboy/eagle/74series/main-2-reduced.sch (Sheet: 1/1)